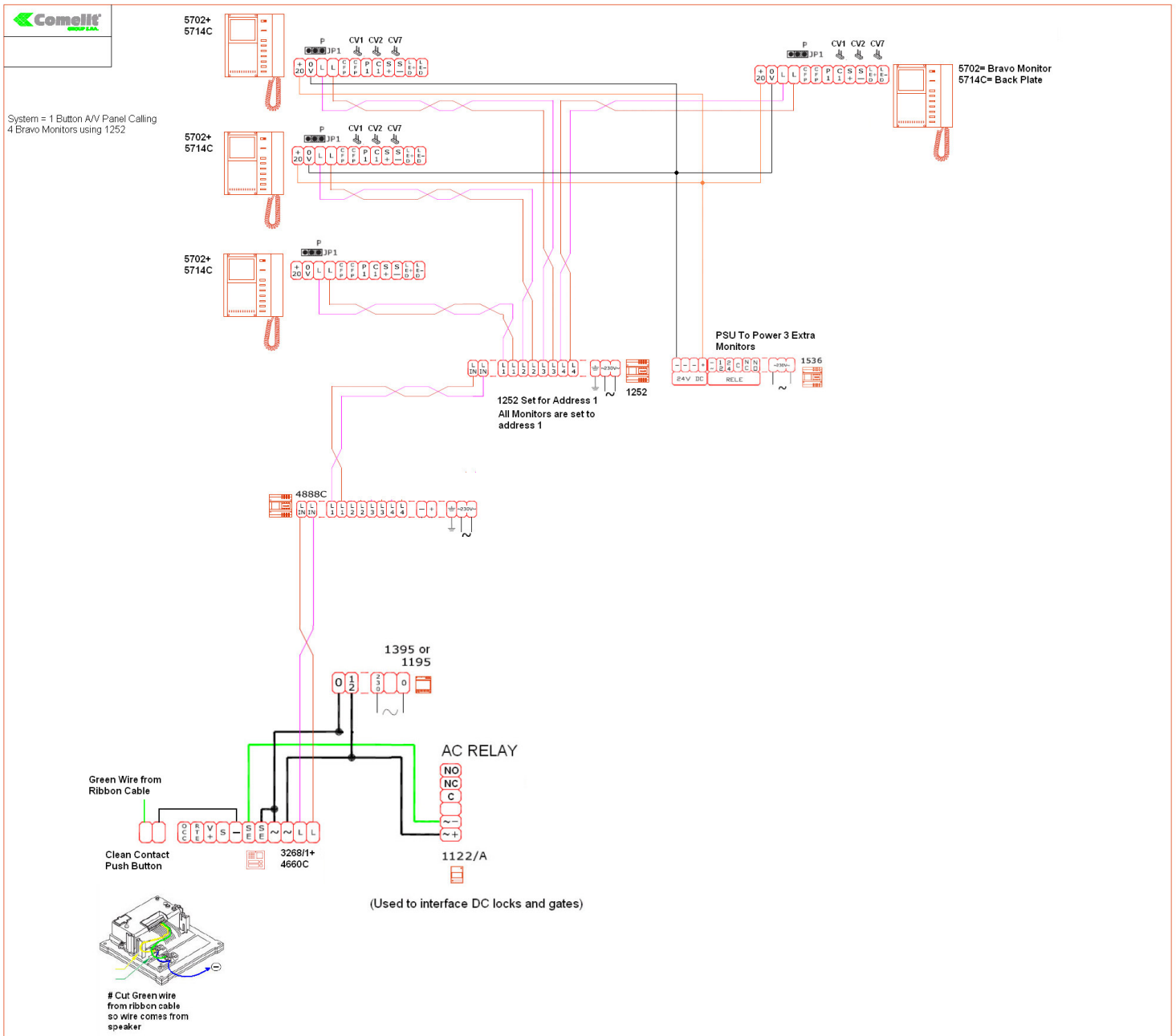
Comelit
5702+
5714C
System = 1 Button A/V Panel Calling
4 Bravo Monitors using 1252
5702= Bravo Monitor
5714C= Back Plate
PSU To Power 3 Extra Monitors
1536
1252
1252 Set for Address 1
All Monitors are set to address 1
4888C
1395 or
1195
AC RELAY
NO
NC
C
Green Wire from Ribbon Cable
Clean Contact Push Button
3268/1+
4660C
1122/A
(Used to interface DC locks and gates)
Cut Green wire from ribbon cable so wire comes from speaker

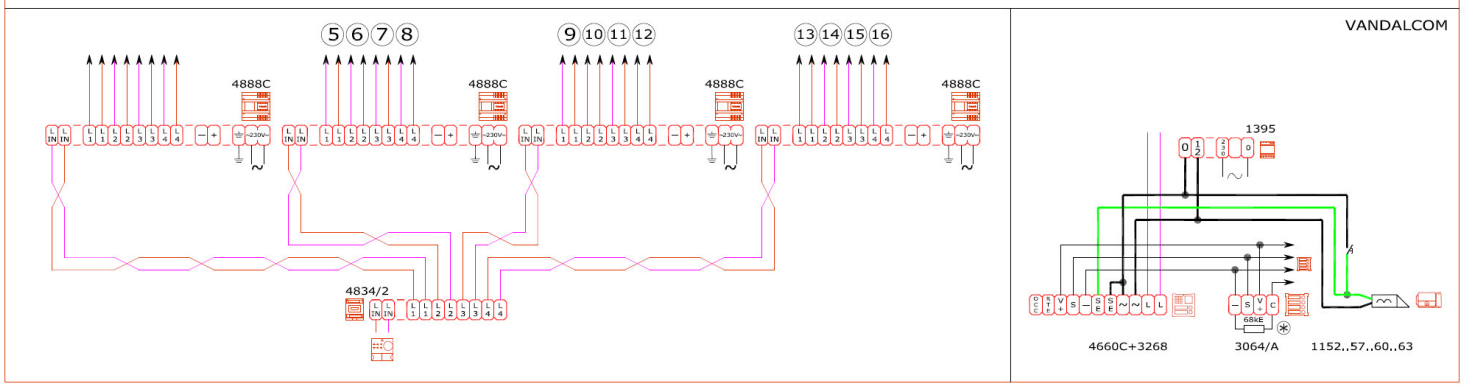
5 6 7 8
9 10 11 12
13 14 15 16
4888C
4834/2
VANDALCOM
1395
4660C+3268
3064/A
1152..57..60..63